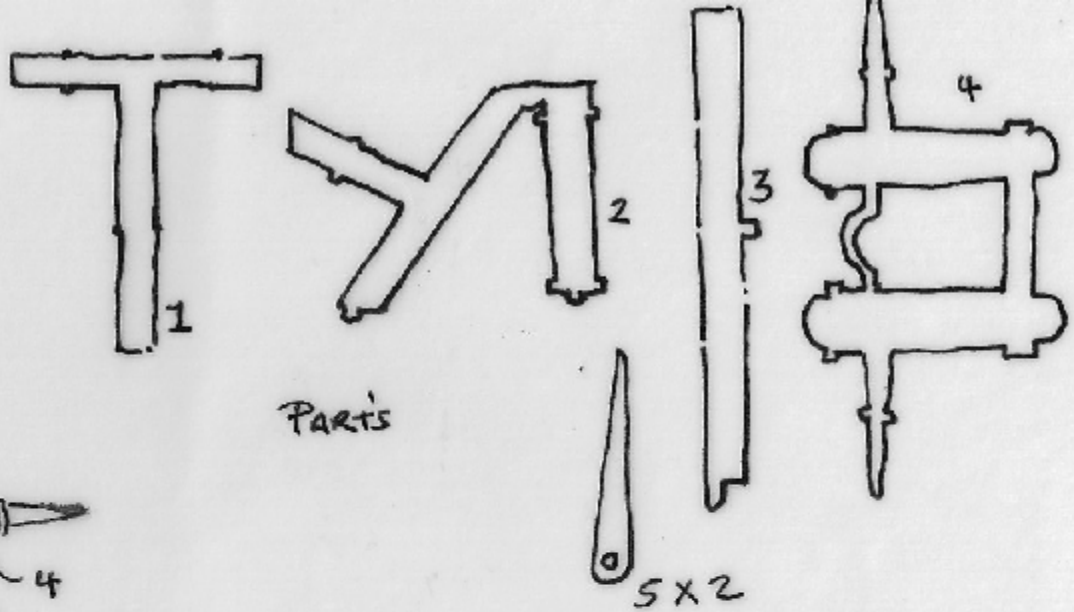
1
2
3
4
5 x 2
Parts

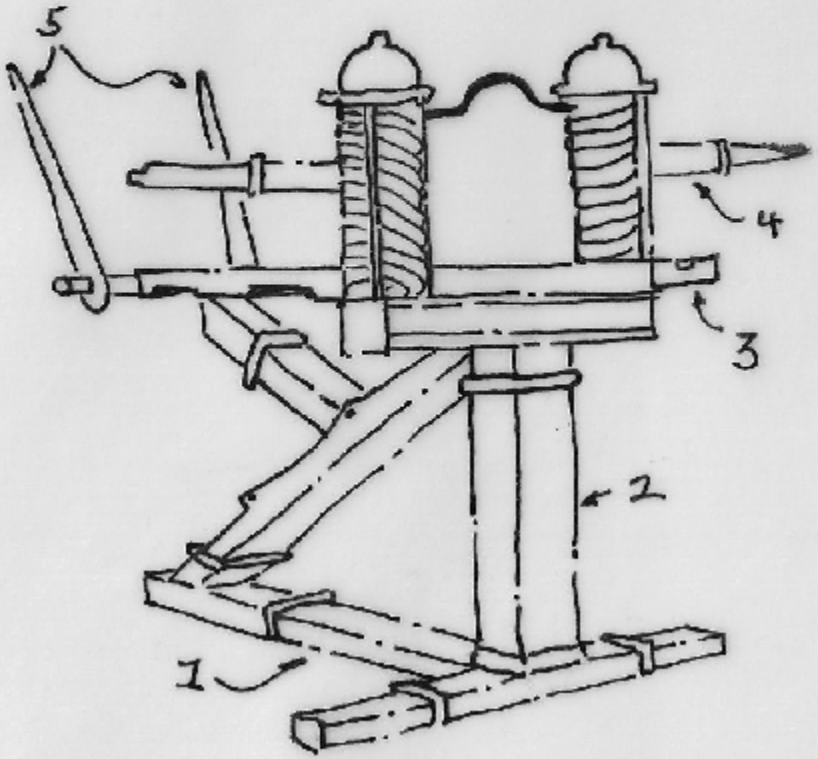
5
4
3
2
1